Elementi elastici BH-E / *BH-E Elastic elements*

Gli elementi elastici compatti BH-E sono molto pratici in quanto non hanno bisogno di staffe per il montaggio. Gli angoli di rotazione γ ed i carichi di torsione sviluppati sono indicati nella tabella di pag 56.

*The **BH-E** elastic elements are very pratical because they don't need supports for the assembly. The γ developped rotation angles and the torque loads are shown in the table of page 56.*

BH-E 215÷538

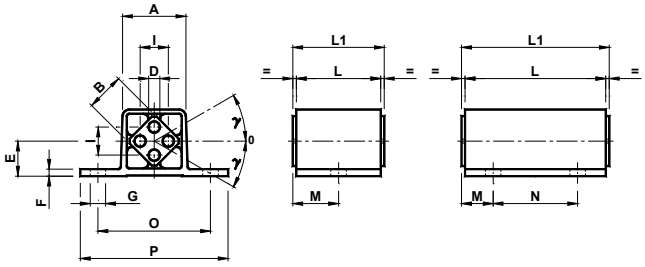

BH-E 645x100
BH-E 750x120

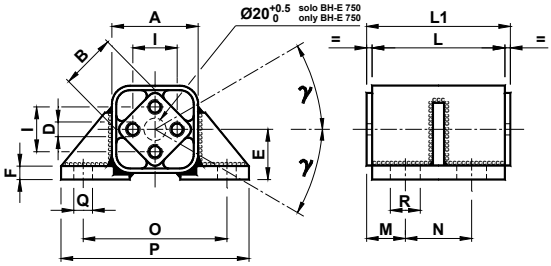

BH-E 750x200

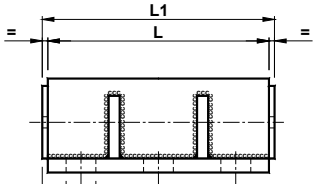

BH-E 860÷1100

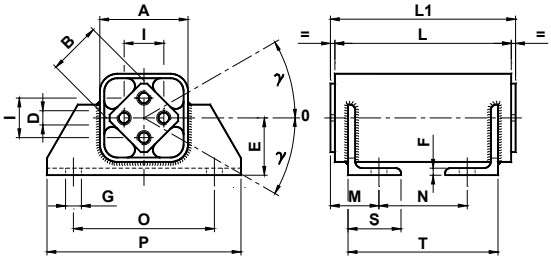

Tipo *Type*	Cod. n°	A	B	D	E	F	G	I	M	N	O	P	Q	R	S	T	L	L1 $^{0}_{-0.3}$	Peso *Weight* [kg]
BH-E 215 x 25	**CE071565**	29	15	Ø 5	15	3	7	10	15.0	-	50	65	-	-	-	-	25	30	0.05
BH-E 215 x 40	**CE071566**	29	15	Ø 5	15	3	7	10	22.5	-	50	65	-	-	-	-	40	45	0.07
BH-E 215 x 60	**CE071567**	29	15	Ø 5	15	3	7	10	12.5	40	50	65	-	-	-	-	60	65	0.11
BH-E 318 x 30	**CE071570**	35	18	Ø 6	18	3.5	9	12	17.5	-	60	80	-	-	-	-	30	35	0.08
BH-E 318 x 50	**CE071571**	35	18	Ø 6	18	3.5	9	12	27.5	-	60	80	-	-	-	-	50	55	0.13
BH-E 318 x 80	**CE071572**	35	18	Ø 6	18	3.5	9	12	17.5	50	60	80	-	-	-	-	80	85	0.21
BH-E 427 x 40	**CE071575**	49	27	Ø 8	25	4.5	11	20	22.5	-	80	105	-	-	-	-	40	45	0.21
BH-E 427 x 60	**CE071576**	49	27	Ø 8	25	4.5	11	20	32.5	-	80	105	-	-	-	-	60	65	0.31
BH-E 427 x 100	**CE071577**	49	27	Ø 8	25	4.5	11	20	22.5	60	80	105	-	-	-	-	100	105	0.52
BH-E 538 x 60	**CE071580**	67	38	Ø10	34	6	13	25	35.0	-	100	125	-	-	-	-	60	70	0.59
BH-E 538 x 80	**CE071581**	67	38	Ø10	34	6	13	25	25.0	40	100	125	-	-	-	-	80	90	0.77
BH-E 538 x 120	**CE071582**	67	38	Ø10	34	6	13	25	25.0	80	100	125	-	-	-	-	120	130	1.15
BH-E 645 x 100	**CE071585**	72	45	Ø12	41	8	-	35	22.5	65	115	145	13	20	-	-	100	110	2.70
BH-E 750 x 120	**CE071590**	78	50	M12x40	45	12	-	40	35.0	60	130	170	17	27	-	-	120	130	3.50
BH-E 750 x 200	**CE071591**	78	50	M12x40	45	12	-	40	35.0	70	130	170	17	27	-	-	200	210	6.00
BH-E 860 x 150	**CE071595**	100	60	M16x22	65	8	18	45	50.0	60	160	220	-	-	60	130	150	160	9.70
BH-E 860 x 200	**CE071596**	100	60	M16x22	65	8	18	45	55.0	100	160	220	-	-	60	170	200	210	12.20
BH-E 860 x 300	**CE071597**	100	60	M16x22	65	8	18	45	55.0	200	160	220	-	-	60	270	300	310	16.90
BH-E 970 x 200	**CE071600**	120	70	M20x28	80	9	22	50	55.0	100	200	260	-	-	65	170	200	210	16.90
BH-E 970 x 300	**CE071601**	120	70	M20x28	80	9	22	50	55.0	200	200	260	-	-	65	270	300	310	23.50
BH-E 970 x 400	**CE071602**	120	70	M20x28	80	9	22	50	55.0	300	200	260	-	-	65	370	400	410	30.20
BH-E 1080 x 200	**CE071605**	136	80	M20x28	85	10	22	60	65.0	80	220	280	-	-	80	170	200	210	23.50
BH-E 1080 x 300	**CE071606**	136	80	M20x28	85	10	22	60	65.0	180	220	280	-	-	80	270	300	310	32.50
BH-E 1080 x 400	**CE071607**	136	80	M20x28	85	10	22	60	65.0	280	200	280	-	-	80	370	400	410	41.50
BH-E 1100 x 250	**CE071610**	170	100	M24x32	110	12	26	75	75.0	110	300	380	-	-	100	220	250	260	47.10
BH-E 1100 x 400	**CE071611**	170	100	M24x32	110	12	26	75	75.0	260	300	380	-	-	100	370	400	410	68.20
BH-E 1100 x 500	**CE071612**	170	100	M24x32	100	12	26	75	75.0	360	300	380	-	-	100	420	500	510	82.80

Nelle grandezze **215**, **318**, **427** e **538** il corpo esterno e il profilo interno sono realizzati in alluminio. Nelle grandezze **645** e **750** il corpo esterno è realizzato in acciaio verniciato mentre il profilo interno in alluminio. Nelle grandezze **860**, **970**, **1080** e **1100** sia il corpo esteno che il profilo interno sono realizzati in acciaio. Il corpo esterno è comprensivo di flange di fissaggio: questo semplifica le operazioni di montaggio. E' quindi particolarmente indicato nelle applicazioni con forti oscillazioni alternate del perno e carichi elevati. Per i carichi di torsione, i carichi massimi ammissibili e le relative frecce consultare la tabella di pag.15.

*In the **215**, **318**, **427** and **538** sizes the external body and the inner shape are made of aluminium. In the **645** and **750** sizes the external body is made of oven-painted steel while the inner shape is in aluminium. In the **860**, **970**, **1080** and **1100** sizes both the external body and the inner shape are made of steel. The external body includes the fixing flanges: this makes more easy the assembly operations. For this reason it is especially suitable in the applications with high alternate oscillations of the pin and with high loads. For the torque loads, maximum admissible loads and relative arrows, please, see the table of page 15.*

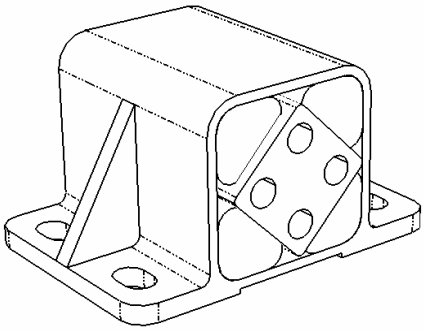

TABELLA DEI CARICHI / *LOADS TABLE*

Tipo *Type*	**Carico di Torsione M_t in Nm con ∢ γ** *Torque M_t in Nm at ∢ γ*					
	5°	**10°**	**15°**	**20°**	**25°**	**30°**
215 x **25**	0.7	1.6	2.5	3.8	5.4	7.8
215 x **40**	1.1	2.5	4.0	6.1	8.7	12.5
215 x **60**	1.6	3.8	6.0	9.2	13.0	18.8
318 x **30**	1.8	4.2	7.0	10.5	14.3	19.5
318 x **50**	3.0	7.0	11.7	17.5	23.8	32.5
318 x **80**	4.8	11.2	18.9	28.0	38.2	52.0
427 x **40**	4.7	10.2	16.5	25.6	37.6	54.2
427 x **60**	6.8	15.3	24.8	38.4	56.4	81.3
427 x **100**	11.8	25.5	41.2	64.0	94.0	135.5
538 x **60**	12.4	29.0	48.2	74.0	107.5	153.5
538 x **80**	16.5	38.7	64.3	98.7	143.4	204.7
538 x **120**	24.7	58.0	96.4	148.0	215.0	307.0
645 x **80**	26.4	60.0	98.6	152.4	210.5	302.0
645 x **100**	33.0	75.0	123.2	190.5	263.1	377.5
645 x **150**	49.5	112.5	184.8	285.8	394.6	566.3
750 x **120**	50.0	121.0	225.0	356.0	513.0	741.0
750 x **200**	100.0	237.0	428.0	670.0	963.0	1378.0
750 x **300**	147.0	350.0	630.0	990.0	1431.0	2052.0
860 x **150**	70.0	160.0	283.0	440.0	668.0	955.0
860 x **200**	93.0	213.0	378.0	586.0	890.0	1274.0
860 x **300**	140.0	320.0	566.0	880.0	1336.0	1910.0
970 x **200**	134.0	360.0	618.0	985.0	1415.0	2015.0
970 x **300**	201.0	540.0	927.0	1478.0	2122.0	3022.0
970 x **400**	268.0	720.0	1236.0	1970.0	2830.0	4030.0
1080 x **200**	192.0	480.0	806.0	1230.0	1800.0	2570.0
1080 x **300**	288.0	720.0	1209.0	1845.0	2700.0	3855.0
1080 x **400**	384.0	960.0	1612.0	2460.0	3600.0	5140.0
1100 x **250**	385.0	1020.0	1720.0	2680.0	3890.0	5990.0
1100 x **400**	616.0	1632.0	2752.0	4288.0	6224.0	9584.0
1100 x **500**	770.0	2040.0	3440.0	5360.0	7780.0	11980.0