Elementi elastici BC-F / *BC-F Elastic elements*

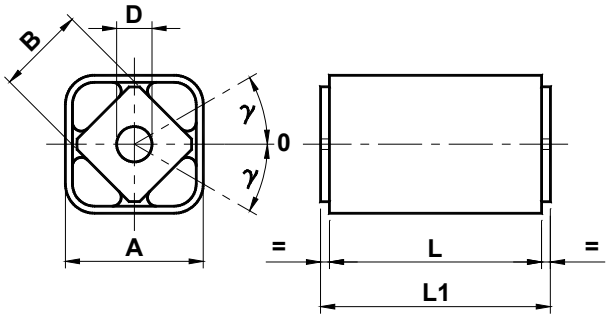

Tipo *Type*	Cod. n°	A	B	D	L	L1 $^{+0.0}_{-0.3}$	Carico di Torsione M_t in Nm con ∢γ *Torque M_t in Nm at ∢γ* 5°	10°	15°	20°	25°	30°	Peso *Weight* [kg]
BC-F 215 x 25	**CE071525**	27 $^{+0.20}_{-0.10}$	15	10 $^{+0.4}_{+0.2}$	25	30	0.7	1.6	2.5	3.8	5.4	7.8	0.07
BC-F 215 x 40	**CE071526**	27 $^{+0.20}_{-0.10}$	15	10 $^{+0.4}_{+0.2}$	40	45	1.1	2.5	4.0	6.1	8.7	12.5	0.11
BC-F 215 x 60	**CE071527**	27 $^{+0.20}_{-0.10}$	15	10 $^{+0.4}_{+0.2}$	60	65	1.6	3.8	6.0	9.2	13.0	18.8	0.17
BC-F 318 x 30	**CE071530**	32 $^{+0.10}_{-0.20}$	18	13 $^{+0.0}_{-0.2}$	30	35	1.8	4.2	7.0	10.5	14.3	19.5	0.11
BC-F 318 x 50	**CE071531**	32 $^{+0.10}_{-0.20}$	18	13 $^{+0.0}_{-0.2}$	50	55	3.0	7.0	11.7	17.5	23.8	32.5	0.18
BC-F 318 x 80	**CE071532**	32 $^{+0.10}_{-0.20}$	18	13 $^{+0.0}_{-0.2}$	80	85	4.8	11.2	18.9	28.0	38.2	52.0	0.28
BC-F 427 x 40	**CE071535**	45 $^{+0.20}_{-0.10}$	27	16 $^{+0.5}_{+0.3}$	40	45	4.7	10.2	16.5	25.6	37.6	54.2	0.28
BC-F 427 x 60	**CE071536**	45 $^{+0.20}_{-0.10}$	27	16 $^{+0.5}_{+0.3}$	60	65	6.8	15.3	24.8	38.4	56.4	81.3	0.39
BC-F 427 x 100	**CE071537**	45 $^{+0.20}_{-0.10}$	27	16 $^{+0.5}_{+0.3}$	100	105	11.8	25.5	41.2	64.0	94.0	135.5	0.65
BC-F 538 x 60	**CE071540**	60 $^{+0.15}_{-0.30}$	38	20 $^{+0.5}_{+0.2}$	60	70	12.4	29.0	48.2	74.0	107.5	153.5	0.65
BC-F 538 x 80	**CE071541**	60 $^{+0.15}_{-0.30}$	38	20 $^{+0.5}_{+0.2}$	80	90	16.5	38.7	64.3	98.7	143.4	204.7	0.84
BC-F 538 x 120	**CE071542**	60 $^{+0.15}_{-0.30}$	38	20 $^{+0.5}_{+0.2}$	120	130	24.7	58.0	96.4	148.0	215.0	307.0	2.10
BC-F 645 x 80	**CE071545**	72 $^{+0.15}_{-0.30}$	45	24 $^{+0.5}_{+0.2}$	80	90	26.4	60.0	98.6	152.4	210.5	302.0	1.12
BC-F 645 x 100	**CE071546**	72 $^{+0.15}_{-0.30}$	45	24 $^{+0.5}_{+0.2}$	100	110	33.0	75.0	123.2	190.5	263.1	377.5	1.25
BC-F 750 x 120	**CE071550**	78 $^{+0.15}_{-0.30}$	50	30 $^{+0.5}_{+0.2}$	120	130	50.0	121.0	225.0	356.0	513.0	741.0	1.97
BC-F 750 x 200	**CE071551**	78 $^{+0.15}_{-0.30}$	50	30 $^{+0.5}_{+0.2}$	200	210	100.0	237.0	428.0	670.0	963.0	1378.0	3.35

Il corpo esterno è realizzato in acciaio verniciato mentre il profilo interno è in alluminio. Questo elemento permette il fissaggio di una leva al quadro interno per attrito utilizzando un bullone passante, avendo la possibilità di inclinare a piacimento la leva. Per il fissaggio del corpo esterno si consiglia la staffa tipo ***SU*** (pag.63). Per i carichi massimi ammissibili e le relative frecce massime consultare la tabella di pag.15.

*The external body is made of oven-painted steel while the inner shape is in aluminium. This element allows the fixing of a lever at the inner square by friction using a through bolt, with the possibility to lean as You prefer the lever. For the fixing of the external body we advise the **SU** support (page 63). For the maximum admissible loads and the relative maximum arrows, please, see the table of page 15.*

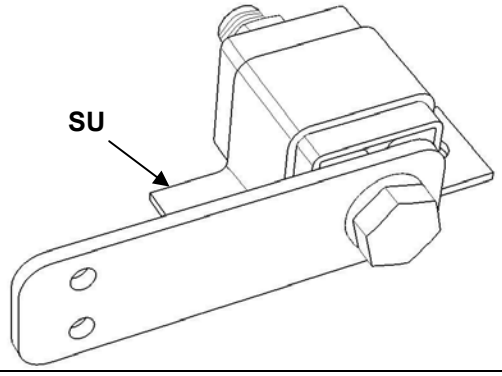

Esempio:
Il corpo viene bloccato per mezzo della staffa SU, sul perno centrale è fissata una leva per mezzo di un bullone passante.

Example:
The body is clamped by the SU clamp, on the central pin is fixed a lever by a through bolt.